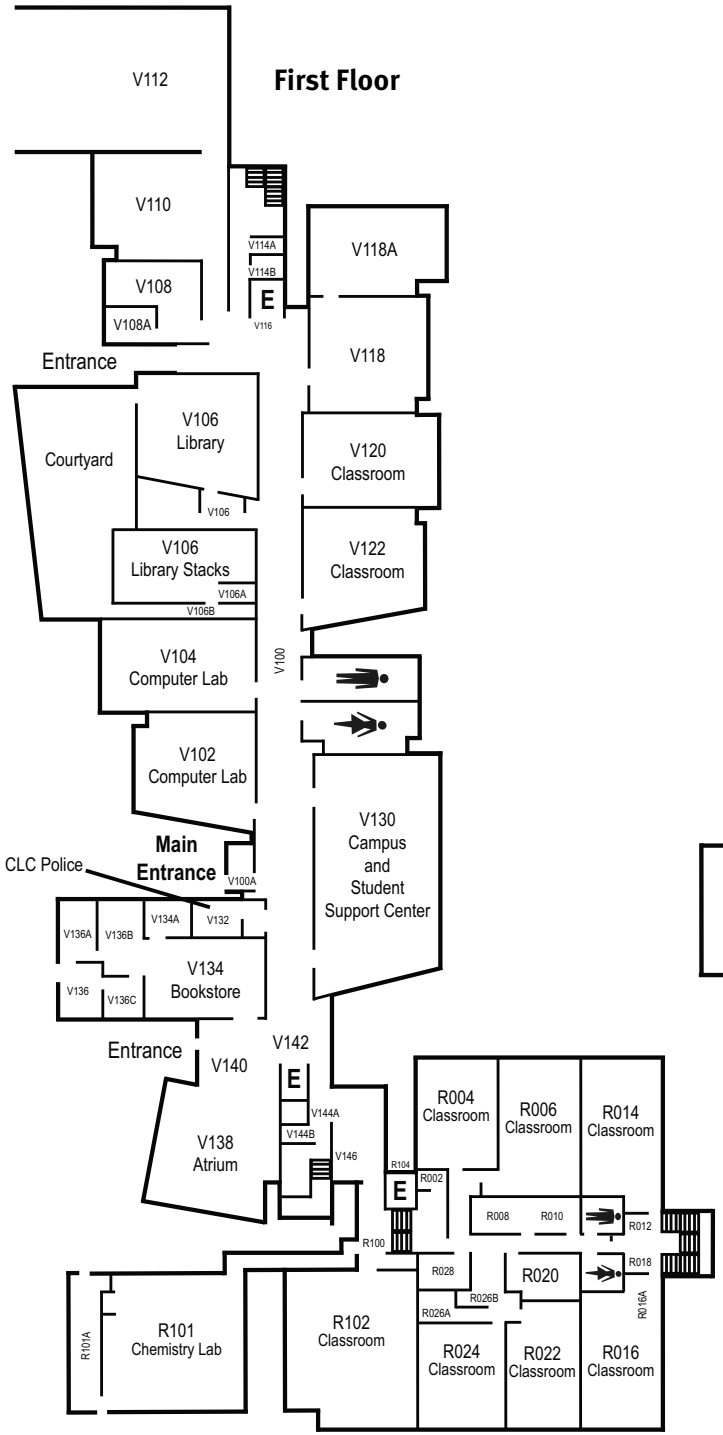

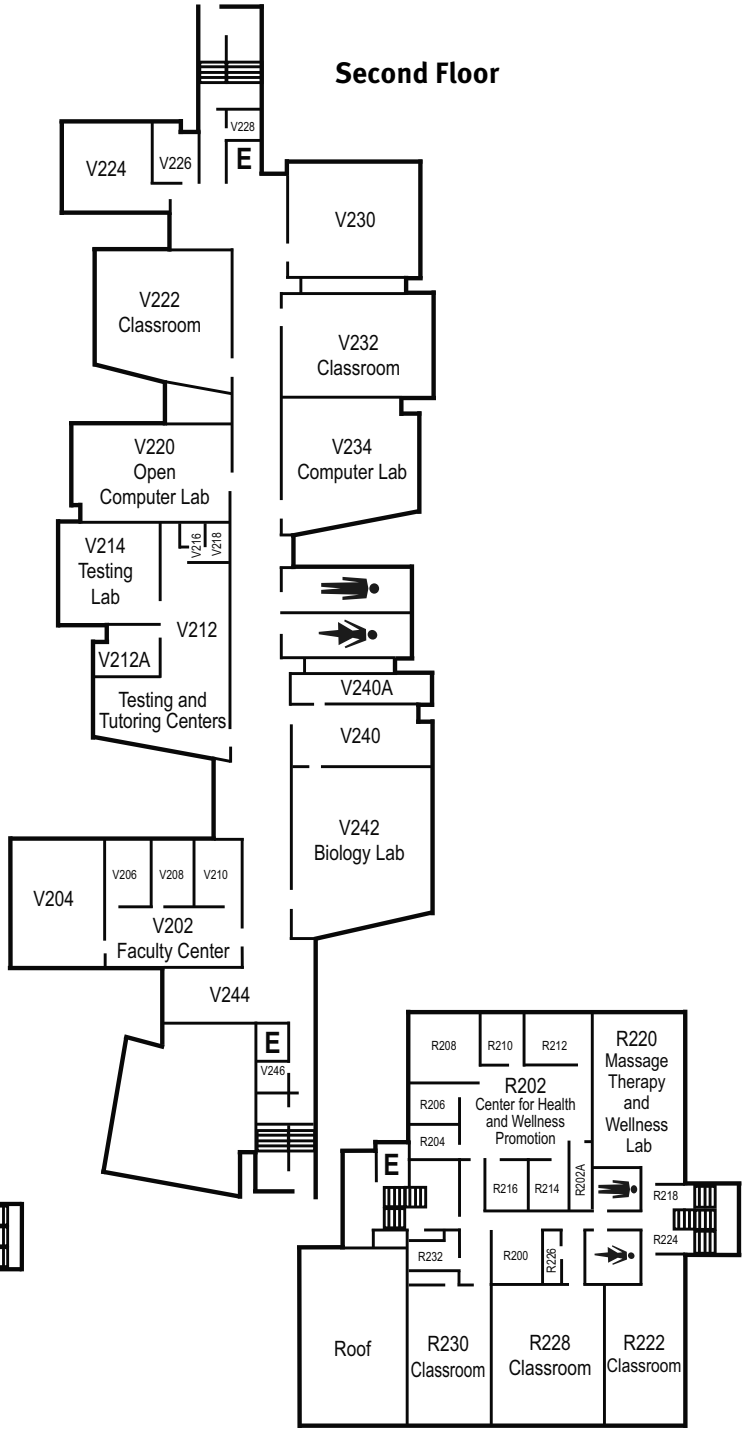

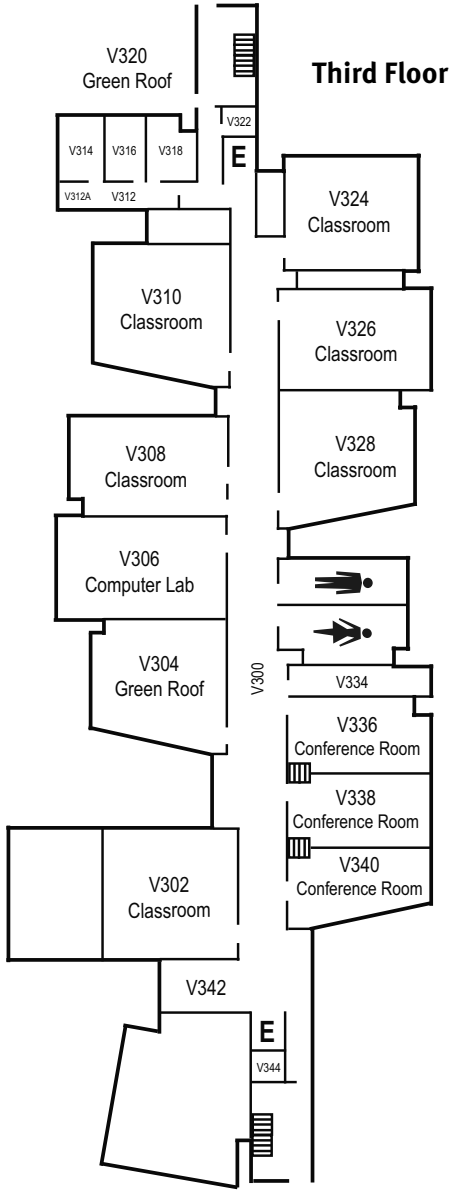

College Lake County

Southlake Campus

4/2016